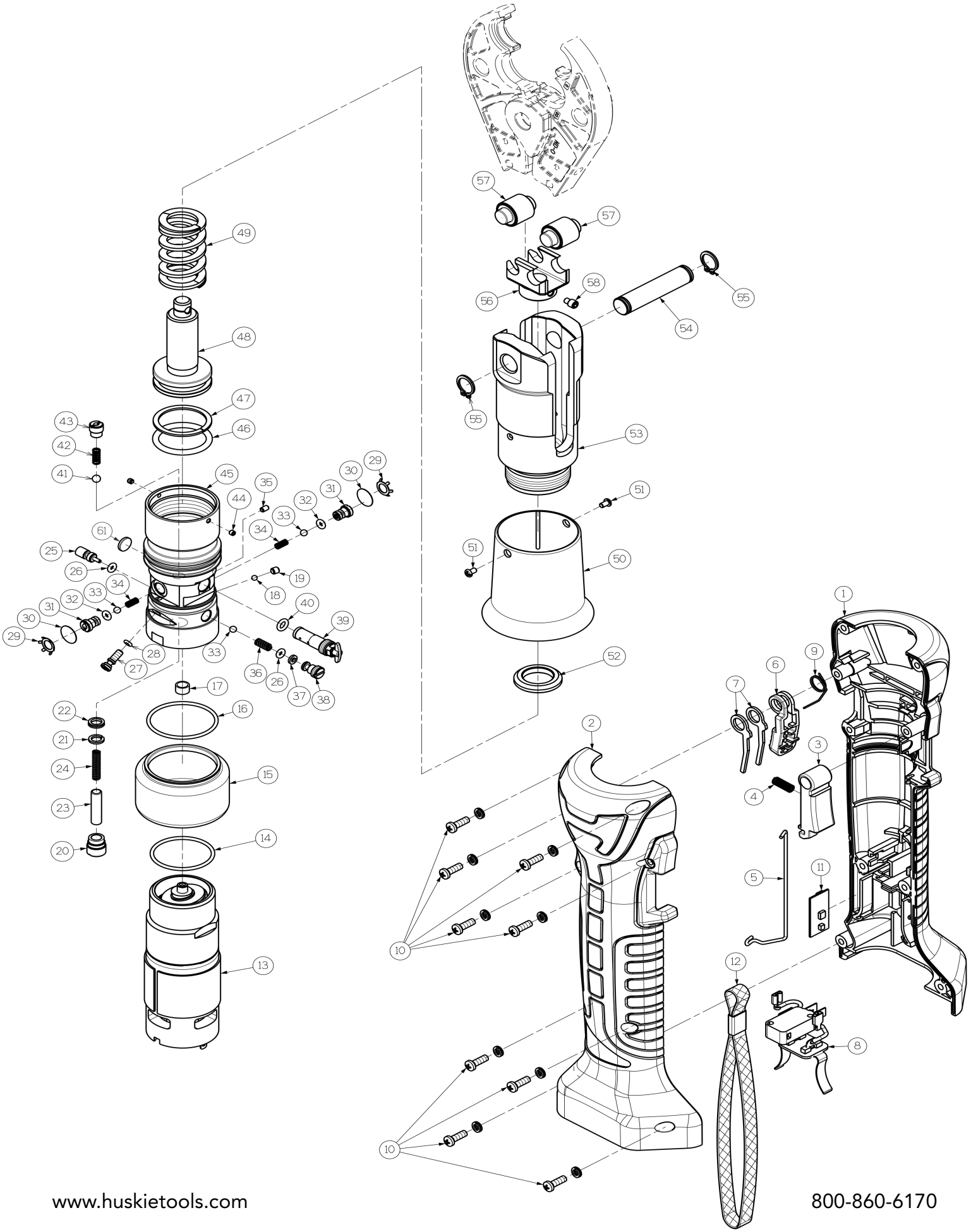
57
57
58
56
55
54
55
53
51
51
50
52
49
48
47
46
43
42
41
45
44
35
32
31
30
29
33
34
61
25
26
19
18
40
39
33
36
26
37
38
27
28
17
22
21
24
23
20
16
15
14
13
1
6
9
7
3
4
5
11
12
8
2
10
10

PARTS LIST

No.	Description	Code Number	Qty
1	Housing set	ILHS-BLUE	1
2			
3	Switch Knob	IL-03	1
4	Spring	4OU-10	1
5	Switch Rod	IL-05	1
6	Release Lever	EZ-07	1
7	Lever Support	EZ-06	2
8	Switch Unit	EZ-05	1
9	Release Spring	EZ-08	1
10	M4 x 12Screw	P500-28	9
11	ICB	IL-11	1
12	Strap	558-07	1
13	Power Unit	IL-13	1
14	S-32 O-Ring	EZ-10	1
15	Oil Reservoir	EZ-11	1
16	S-36 O-Ring	EZ-12	1
17	Bush	R14A-19	1
18	1/8" Ball	40-20	1
19	M4 x4 Screw	85-47	1
20	Cylinder Insert	EZ-13	2
21	Back-Up Ring	UC-28	2
22	S-6 Pent Seal	EZ-14	2
23	Pump Piston	EZ-15	2
24	Spring	EZ-16	2
25	Release Valve Stem	EZ-17	1
26	P-3 O-Ring	16-36	2
27	Reservoir Plug	EZ-18	1
28	S-3 O-Ring	7R-17	1
29	SI-Ring	R14A-23	2
30	Filter	EZ-19	2

No.	Description	Code Number	Qty
31	Suction Valve	EZ-20	2
32	P-3 O-Ring	EZ-21	2
33	5/32" Steel Ball	22-21	3
34	Valve Spring	EZ-22	2
35	M3X5 Screw	UC-37A	1
36	Release Spring	EZ-23	1
37	P-3 Back-Up Ring	9H-38	1
38	Release Plug	EZ-24	1
39	Valve Cartridge	EZ-25	1
40	P-5 O-Ring	5N-35	1
41	3/16" Ball	16-49	2
42	Valve Spring	EZ-26	2
43	Valve Screw	EZ-27	2
44	M3X4 Screw	ND-01	2
45	Body	EZ-28	1
46	P-28 O-Ring	EZ-29	1
47	P-28 Back-Up Ring	55D-03	1
48	Ram	IL-48	1
49	Ram Spring	EZ-31	1
50	Cover	IL-50	1
51	M3x5 Screw	13S-23	2
52	Guide Ring	IL-52	1
53	Body Head	IL-53	1
54	Pin	IL-54	1
55	Snap Ring	IL-55	2
56	Roller Head	IL-56	1
57	Roller	IL-57	2
58	Screw M5XL8	IL-58	1
61	Magnet	336-64	1